Rewarding Learning

Centre Number

Candidate Number

General Certificate of Secondary Education
2019

GCSE Physics

Unit 1

Higher Tier

GPY12

[GPY12]

THURSDAY 30 MAY, AFTERNOON

TIME

1 hour 30 minutes.

INSTRUCTIONS TO CANDIDATES

Write your Centre Number and Candidate Number in the spaces provided at the top of this page.
You must answer the questions in the spaces provided.
Do not write outside the boxed area on each page or on blank pages.
Complete in black ink only. **Do not write with a gel pen.**
Answer **all** questions.

INFORMATION FOR CANDIDATES

The total mark for this paper is 100.
Figures in brackets printed down the right-hand side of pages indicate the marks awarded to each question or part question.
Quality of written communication will be assessed in Questions **1(c)** and **2(d)**.

11770

28GPY1201

1 **(a)** A jet aircraft requires a velocity of 70 m/s for a successful take-off.
It reaches this velocity having started from rest and accelerating uniformly along the runway for a time of 14 seconds.

(i) On the grid below, using suitable scales on both axes, draw the velocity–time graph to represent the motion.
Velocity should be on the y-axis.

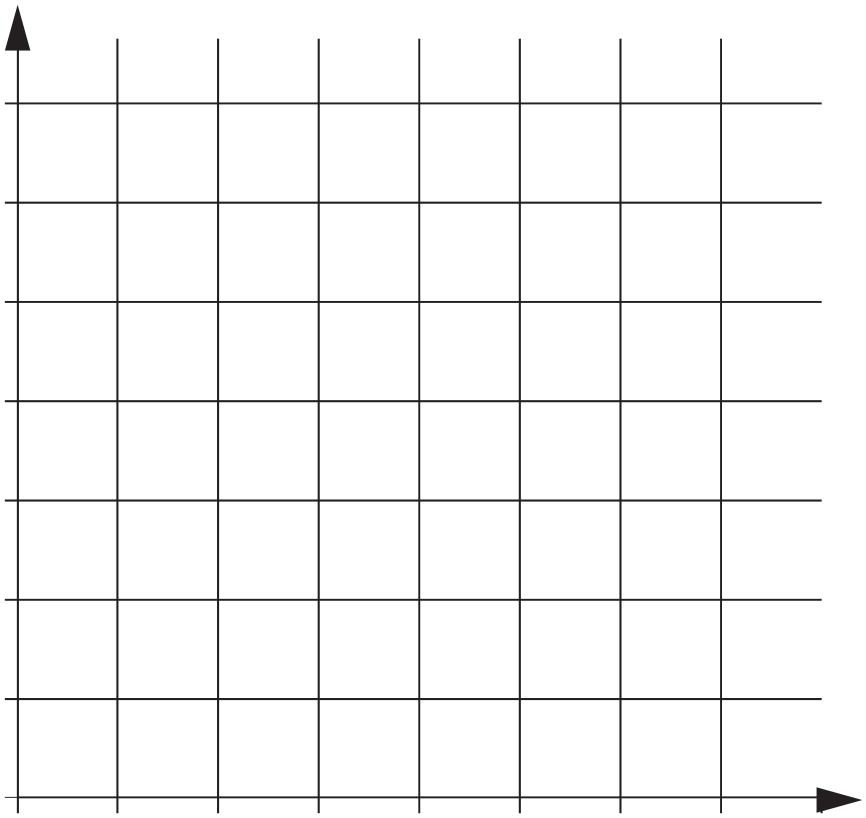

[4]

(ii) Using the graph, or otherwise, calculate the acceleration of the jet during take-off.
Show clearly how you get your answer, starting with the equation you plan to use.

Acceleration = _____ m/s^2 [3]

(iii) The total mass of the jet on take-off was 8.9×10^4 kg. Using your answer to part **(ii)** above, calculate the resultant forward thrust provided by the engines.
Show clearly how you get your answer, starting with the equation you plan to use.

Resultant forward thrust = _____ N [3]

[Turn over

(b) On reaching its destination the jet had a touchdown velocity of 55 m/s. The velocity–time graph below represents its motion in coming to a stop on the runway. The aircraft touches down at time = 0.

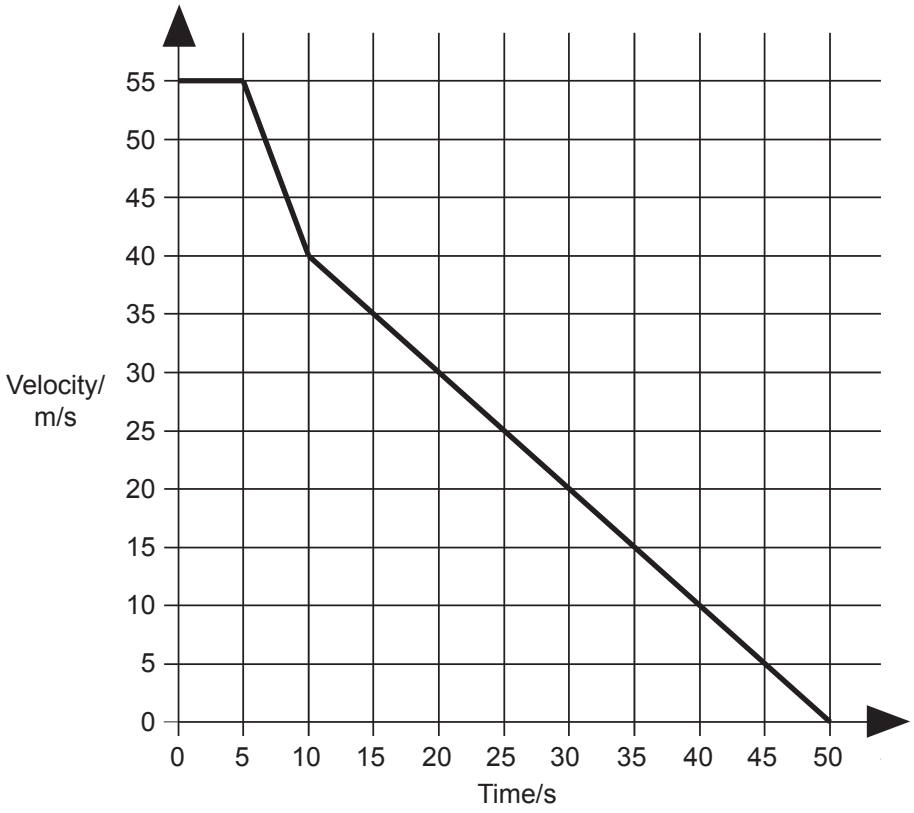

In addition to applying the brakes, during one period of time the pilot also put the engines into reverse thrust to maximise the braking effect.

(i) Between what times were both the reverse engine thrust and the brakes used?
Explain your reasoning.

Reverse thrust and brakes used between _____ and

_____ seconds.

Explanation

_____

_____

_____ [2]

(ii) Using the graph opposite, calculate the length of runway used by the jet in coming to a stop.
You are advised to show clearly how you obtain your answer.

Length of runway used = _____ m [5]

[Turn over

(c) Excessive speed frequently plays a major role in traffic accidents.
Average speed cameras are used to detect and prosecute speeding motorists.
The diagram below represents the layout of such a system.

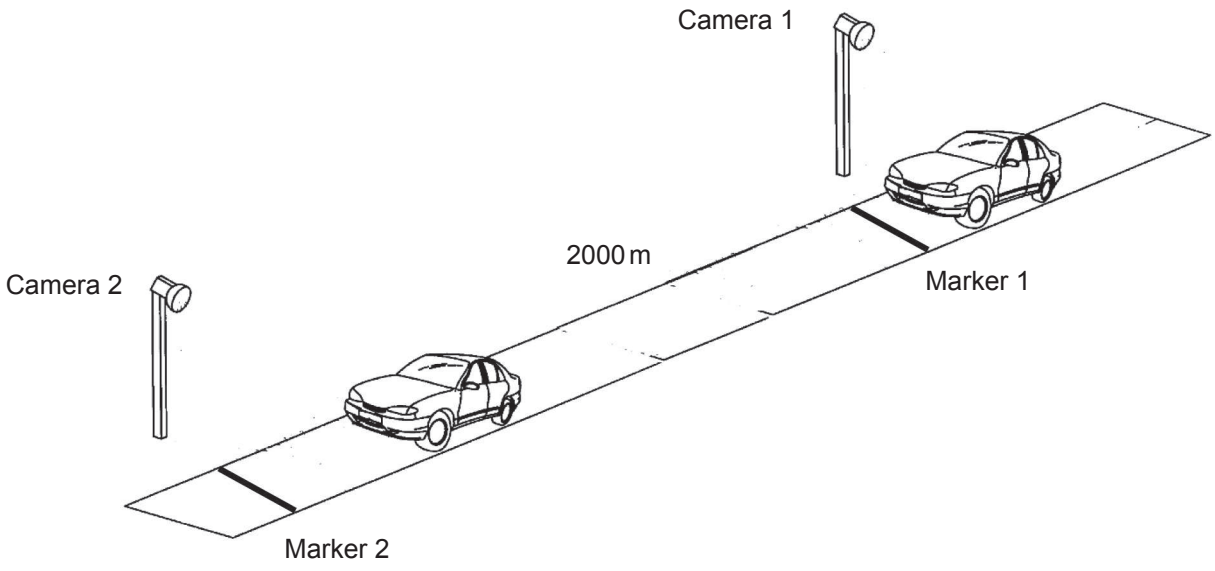

Source: Principal Examiner

Average speed cameras operate as a pair. Camera 1 is the entry camera.
It films the number plate of the car as it enters the control zone and passes marker 1. When the car leaves the zone, at marker 2, the exit camera, camera 2, also films the car and its number plate.

The speed is calculated and if the car is over the speed limit the evidence is passed to the police. In the system shown above the cameras are 2000 m apart.

Describe how the system works.
In your answer you should explain the following points:

- apart from photographing the number plate of the car what happens when the car passes marker 1 and then marker 2
- what measurement indicates excessive speed
- how the average speed is calculated
- why the number plate of the car is recorded
- why a short period of excessive speed between the cameras may not be detected by this system.

In this question, you will be assessed on your written communication skills including the use of specialist scientific terms.

What happens at marker 1 and marker 2 _____

_____

_____

_____

What indicates excessive speed _____

_____

_____

_____

Calculation of average speed _____

_____

_____

Number plate recording _____

_____

Short period of excessive speed between the cameras _____

_____

_____ [6]

[Turn over

2 **(a)** **(i)** State Newton's First Law of Motion.

_____

_____

_____ [2]

(ii) State the thrust needed if the cyclist shown below is to move in a straight line at constant speed.

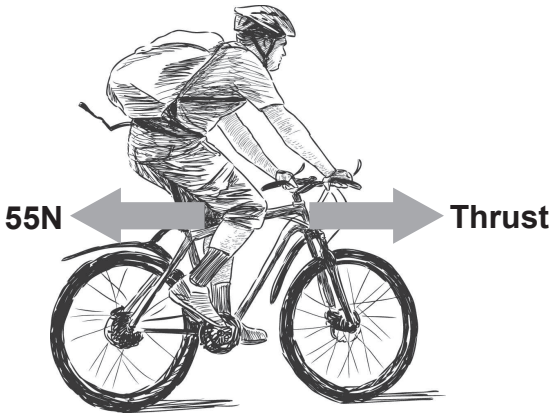

© Getty Images

Thrust = _____ N [1]

(iii) The cyclist and cycle have a total mass of 80 kg.
Calculate the thrust that the cyclist must produce if he is to accelerate at 0.2 m/s^2.
Show clearly how you get your answer, starting with the equation you plan to use.

Thrust = _____ N [4]

(b) Three identical springs are suspended from a beam and various weights are added as shown in the diagram below.

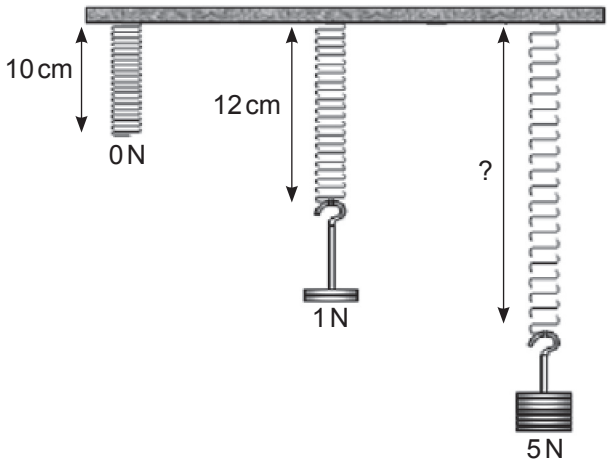

Source: Chief Examiner

(i) Using the information from the diagram calculate the spring constant.
Show clearly how you get your answer, starting with the equation you plan to use.

Spring constant = _____ N/cm [2]

(ii) Calculate the **total length** of the spring when 5 N is attached to it.
Show clearly how you get your answer, starting with the equation you plan to use.

Total length = _____ cm [2]

[Turn over

(c) When American astronauts visited the Moon, one of the experiments they carried out was to drop a feather and a hammer from the same height and at the same time. Both hit the surface of the Moon at the same time.

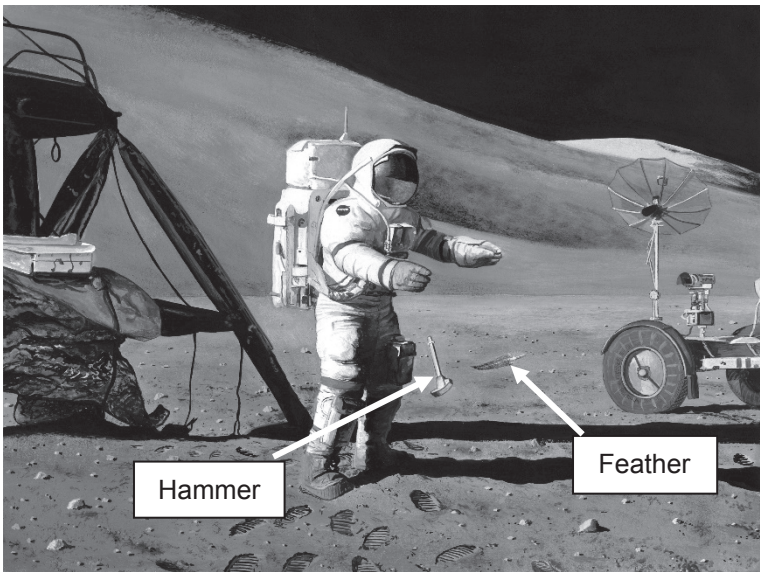

Source: NASA https//history.nasa.gov/alsj/a15 a15_2008-24_Mister_Galileo_was_correct.jpg

(i) If this experiment was carried out on the Earth, the feather would take much longer to fall to the surface. Explain the difference.

_____

_____

_____ [1]

(ii) On the Moon an astronaut in his spacesuit weighs 300 N.
The total area of the soles of his two space boots is 0.15 m^2.
Calculate the pressure he exerts on the surface.
Show clearly how you get your answer, starting with the equation you plan to use.

Pressure = _____ Pa [3]

[Turn over

(d) Energy resources are classified as **renewable** and **non-renewable**.
Wind turbines and nuclear fission are two energy resources that are used to generate electricity.

Describe and explain how each of the two energy resources stated above is classified, their effects on the environment and their ability to provide a reliable source of electricity.

In your answer you should state:

- how each is classified, giving a reason for each one
- describe one positive effect each can have on the environment
- describe one negative effect each can have on the environment
- compare their reliability as sources of electricity.

In this question, you will be assessed on your written communication skills including the use of specialist scientific terms.

Use the page opposite for your answers.

Classification _____

_____

_____

_____

_____

Positive effect _____

_____

_____

_____

_____

Negative effect _____

_____

_____

_____

_____

Reliability _____

_____

_____

_____

_____ [6]

[Turn over

(e) An object is dropped from rest from the top of a tall tower.
The object takes 3.0 s to reach the ground.
The acceleration of free fall g is 10 m/s^2.

(i) Calculate the velocity of the object when it strikes the ground.
Show clearly how you get your answer, starting with the equation you plan to use.

Velocity = _____ m/s [2]

(ii) Calculate the height of the tower.
Show clearly how you get your answer, starting with the equation you plan to use.

Height = _____ m [3]

BLANK PAGE

DO NOT WRITE ON THIS PAGE

(Questions continue overleaf)

3 **(a)** An experiment is carried out to find the density of a liquid.
The values obtained are shown in the table below.

Density of liquid/ g/cm^3
1.05
1.06
1.35
1.04

(i) Which one of the density measurements would appear to be incorrect?

Incorrect density = _____ [1]

(ii) Calculate the **best** value for the density of the liquid.

Best value of density = _____ g/cm^3 [2]

(b) A brass metal block has a hollow centre as shown in the diagram below.

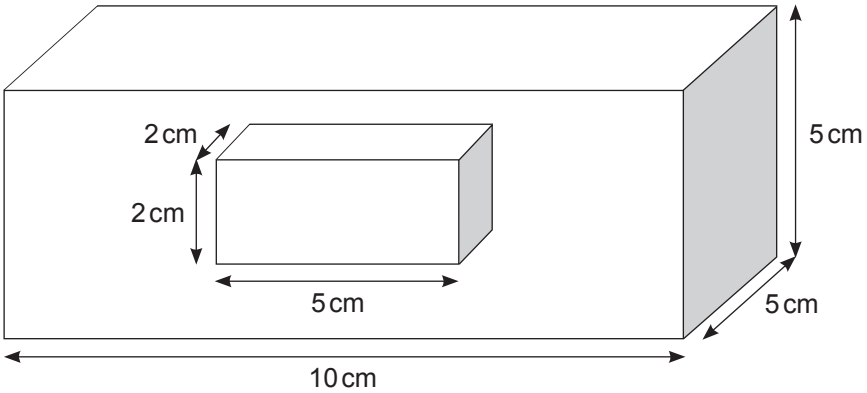

Source: Chief Examiner

The brass has a density of 8.5 g/cm^3.
By first finding the volume of the brass, calculate the mass of brass used in the block.
Show clearly how you get your answer, starting with the equation you plan to use.

Mass of brass = _____ g [5]

[Turn over

(c) **(i)** The metal brass in part **(b)** has a density of 8.5 g/cm^3 but air has a density of 0.0013 g/cm^3.
Use the kinetic theory of matter to explain why the difference in density is so large.

_____

_____

_____

_____ [2]

(ii) The density of ice is 0.9 g/cm^3 and the density of water is 1.0 g/cm^3.
What does this tell you about average separation of the molecules in ice compared with water?

_____ [1]

BLANK PAGE

DO NOT WRITE ON THIS PAGE

(Questions continue overleaf)

4 The nature of the surfaces of materials was investigated in a laboratory to find their effect on heat absorption. Two metal cylinders, identical in shape and size, with a thermometer in each were used. One cylinder had a matt black surface while the other had a shiny surface, as shown in the diagram below.

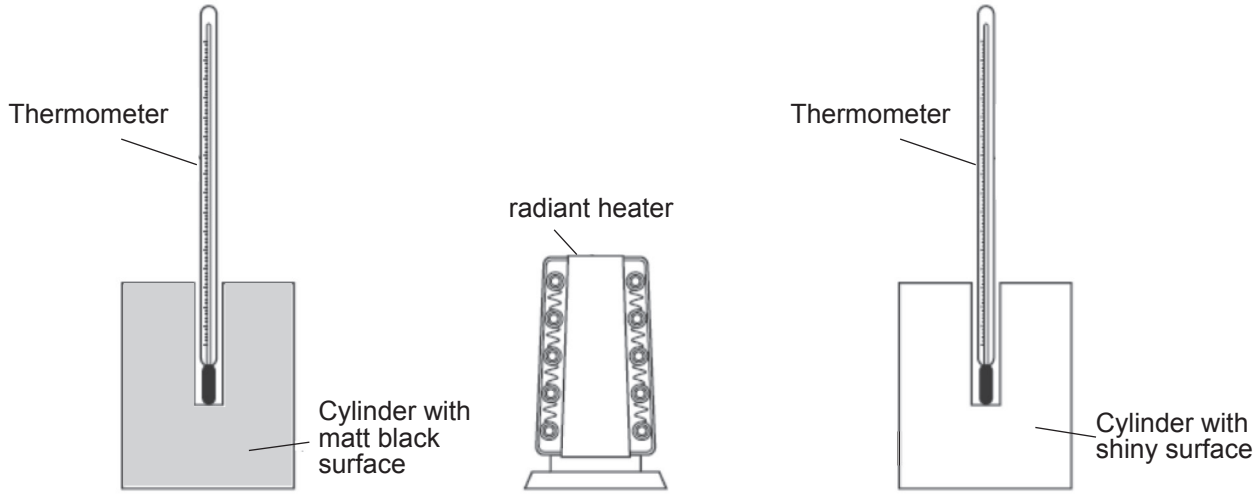

Source: CCEA

An electrical radiant heater was placed the same distance from each cylinder. After 5 minutes, the two thermometers showed different readings.

(a) Which thermometer showed the higher reading? Explain why.

_____

_____

_____ [2]

(b) Heat loss through the walls of a house is often because of conduction and convection.

(i) What might a householder do to reduce heat loss through the walls?

_____ [1]

(ii) What material would the householder use for this purpose?

_____ [1]

(c) A fork lift truck raises a load of mass 50 kg vertically to a height of 3 m.

(i) Calculate the work done in lifting the load.
Show clearly how you get your answer, starting with the equation you plan to use.

Work done = _____ J [3]

(ii) The efficiency of this fork lift truck is 0.7.
How much energy does the truck require to do 2730 J of work?
Show clearly how you get your answer, starting with the equation you plan to use.

Energy required = _____ J [4]

[Turn over

(iii) The owner of the fork lift truck is considering replacing it with another one.
The truck being considered can do 2800 J of work in 3.5 s.
Calculate the power of the new truck.
Show clearly how you get your answer, starting with the equation you plan to use.

Power = _____ W [3]

(d) When a cricket ball is struck by a bat it is momentarily compressed.

(i) What type of energy is gained by the ball as it is being compressed?

_____ [1]

(ii) A cricket ball is required to have a mass between 156 g and 163 g.
In one match, the kinetic energy of the moving ball is 73.75 J.
Calculate the **minimum** speed of the ball.
Show clearly how you get your answer, starting with the equation you plan to use.

Minimum speed = _____ m/s [5]

In another cricket match, a ball of mass 160 g is used.
The ball leaves the bat with a kinetic energy of 40 J.
When it reaches its maximum height, the ball has 8 J of kinetic energy.

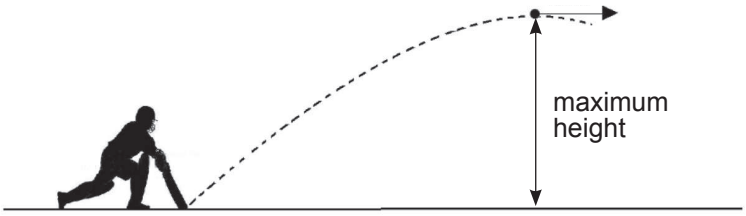

© mark designers / Shutterstock

(iii) Calculate the potential energy of the ball at maximum height.
Show clearly how you get your answer, starting with the equation you plan to use.

Potential energy = _____ J [1]

(iv) By applying the Principle of Conservation of Energy and using your answer to part **(iii)** calculate the maximum height reached by the cricket ball.
Show clearly how you get your answer, starting with the equation you plan to use.

Maximum height = _____ m [4]

[Turn over

5 **(a)** A student reads in a textbook:

"Some nuclei are unstable and disintegrate randomly, spontaneously emitting alpha, beta or gamma radiation"

(i) What is meant by saying the disintegration is random?

_____

_____ [1]

(ii) What do physicists call such random, spontaneous disintegration of atomic nuclei?

_____ [1]

(iii) The table below gives the details of alpha, beta and gamma radiations. Complete the table.

Details	Name of the radiation	Relative mass compared to the proton	Relative charge compared to the proton
High energy electromagnetic wave			
A helium nucleus consisting of two protons and two neutrons			
A high speed electron			

[4]

(b) Explain what is meant by isotopes in terms of the particles in the nucleus of an atom.

_____

_____ [2]

(c) Iodine-131 emits beta radiation and has a half-life of 8 hours.
Shortly after a nuclear accident, spinach plants were highly radioactive because they absorbed iodine-131.

A sample of spinach leaves had an activity of 2096 counts per second (cps) before correcting for background activity. Background activity was 48 cps.

(i) What does it mean that the half-life of iodine-131 is 8 hours?

_____

_____ [1]

(ii) What was the activity of the spinach leaves after correcting for background activity?

_____ cps [1]

(iii) Calculate the corrected count rate of the spinach leaves after 24 hours.

Corrected count rate after 24 hours = _____ cps [3]

[Turn over

Iodine-131 decays to Xenon.

(iv) Complete the decay equation below for iodine-131.

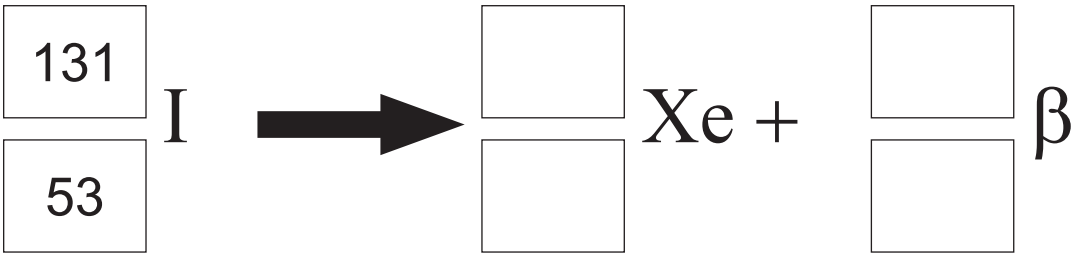

[2]

THIS IS THE END OF THE QUESTION PAPER

BLANK PAGE

DO NOT WRITE ON THIS PAGE

DO NOT WRITE ON THIS PAGE

For Examiner's use only	
Question Number	Marks
1	
2	
3	
4	
5	
Total Marks	

Examiner Number

Permission to reproduce all copyright material has been applied for.
In some cases, efforts to contact copyright holders may have been unsuccessful and CCEA will be happy to rectify any omissions of acknowledgement in future if notified.

238239